GRUNDFOS

Company name:	-
Created by:	-
Phone:	-
Fax:	-
Date:	-

96523210 CRI 10-10 60 Hz

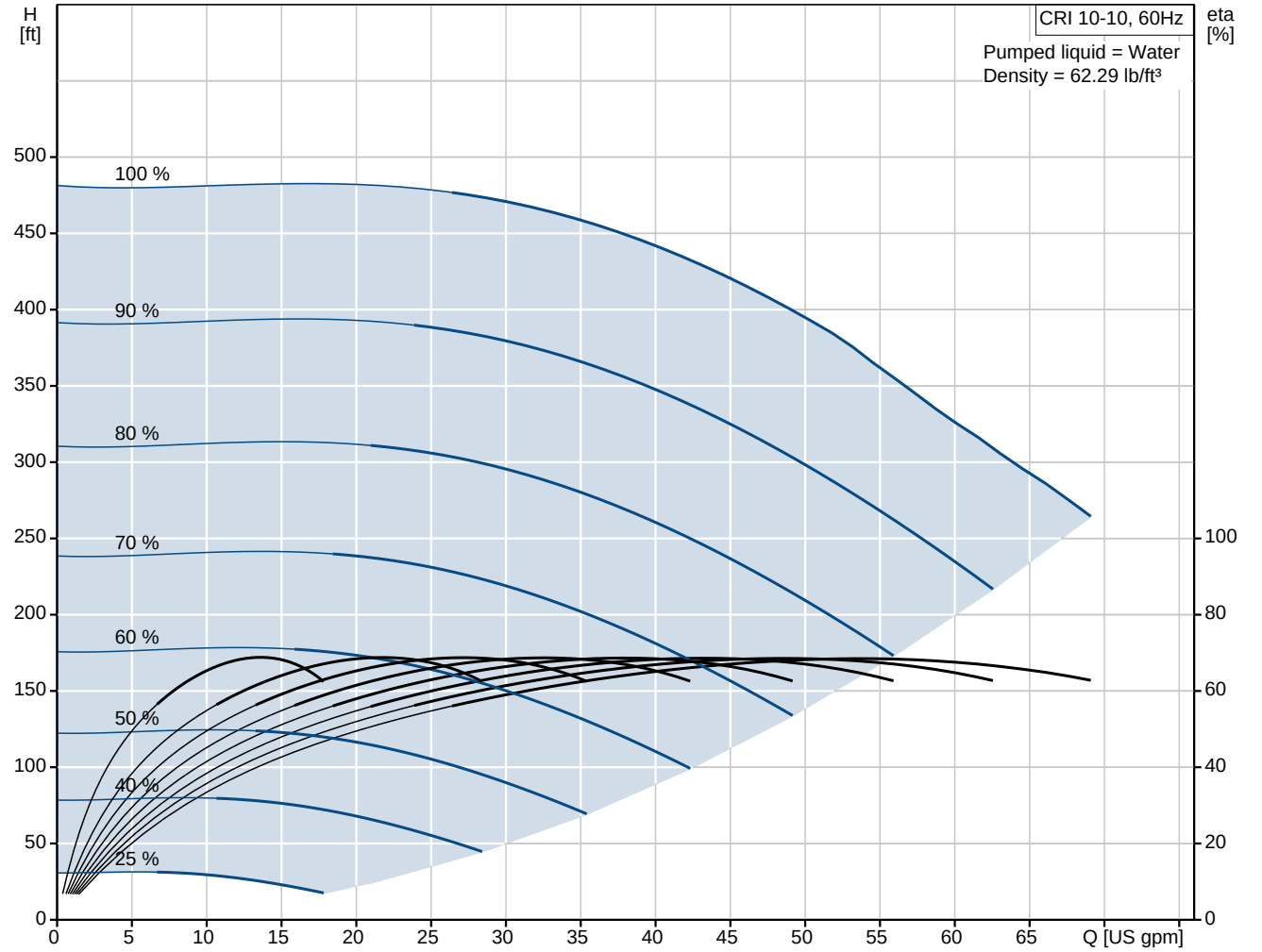

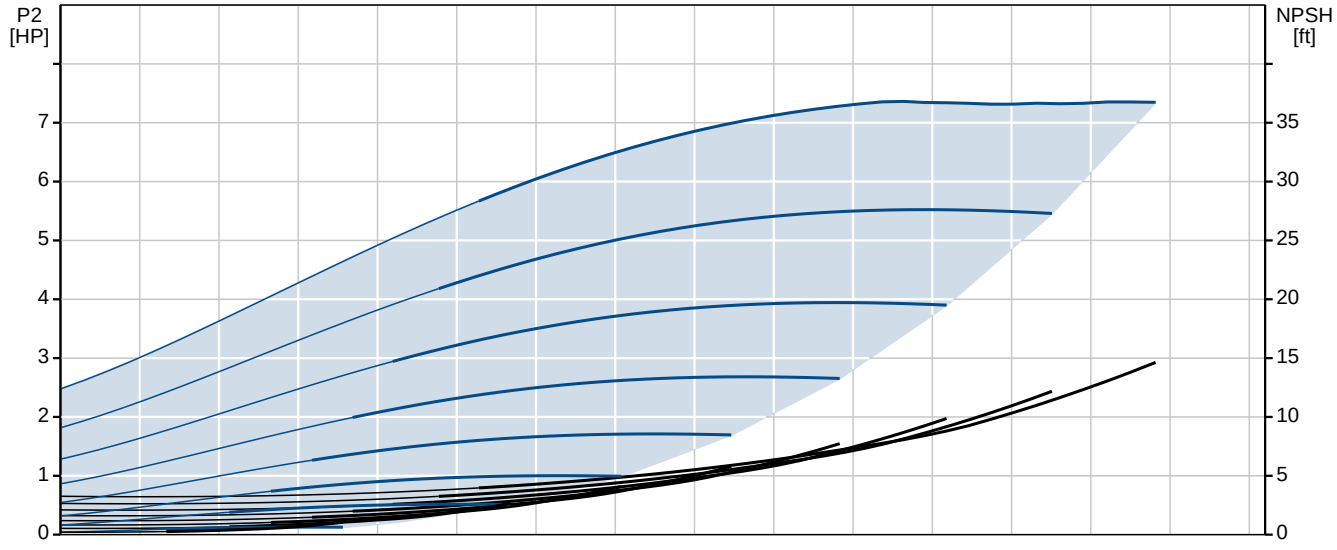

GRUNDFOS

Company name: -
Created by: -
Phone: -
Fax: -
Date: -

Description	Value
Product name:	CRI 10-10 A-CA-I-E-HQQE A-CA-I-E HQQE
Product Number:	96523210
EAN number:	5700396900179
Technical:	
Speed for pump data:	3467 rpm
Rated flow:	53.3 US gpm
Rated head:	376 ft
Head max:	52.5 ft
Impellers:	10
Shaft seal:	HQQE
Approvals on nameplate:	ANSI/NSF61
Curve tolerance:	ISO 9906:1999 Annex A
Stages:	10
Pump version:	A
Model:	A
Cooling:	TEFC
Materials:	
Pump housing:	Stainless steel
	DIN W.-Nr. 1.4408
	ASTM A 351 CF 8M
Impeller:	Stainless steel
	DIN W.-Nr. 1.4301
	AISI 304
Material code:	I
Code for rubber:	E
Installation:	
Maximum ambient temperature:	140 °F
Max pressure at stated temperature:	232 psi / 250 °F
	232 psi / -4 °F
Flange standard:	FlexiClamp / Oval
Connect code:	CA
Pipe connection:	3 7/16" / 2" NPT
Flange size for motor:	213TC
Liquid:	
Liquid temperature range:	-4 .. 248 °F
Density:	62.29 lb/ft³
Electrical data:	
Motor type:	132DA
Number of poles:	2
Rated power - P2:	7.5 HP
Power (P2) required by pump:	7.5 HP
Main frequency:	60 Hz
Rated voltage:	3 x 208-230/460 V
Rated current:	19,5-18,1/9,09 A
Starting current:	1020-1480 %
Cos phi - power factor:	0,89-0,86
Rated speed:	3490-3515 rpm
Enclosure class (IEC 34-5):	55 (Protect. water jets/dust)
Insulation class (IEC 85):	F
Motor protection:	PTC
Motor Number:	85904392

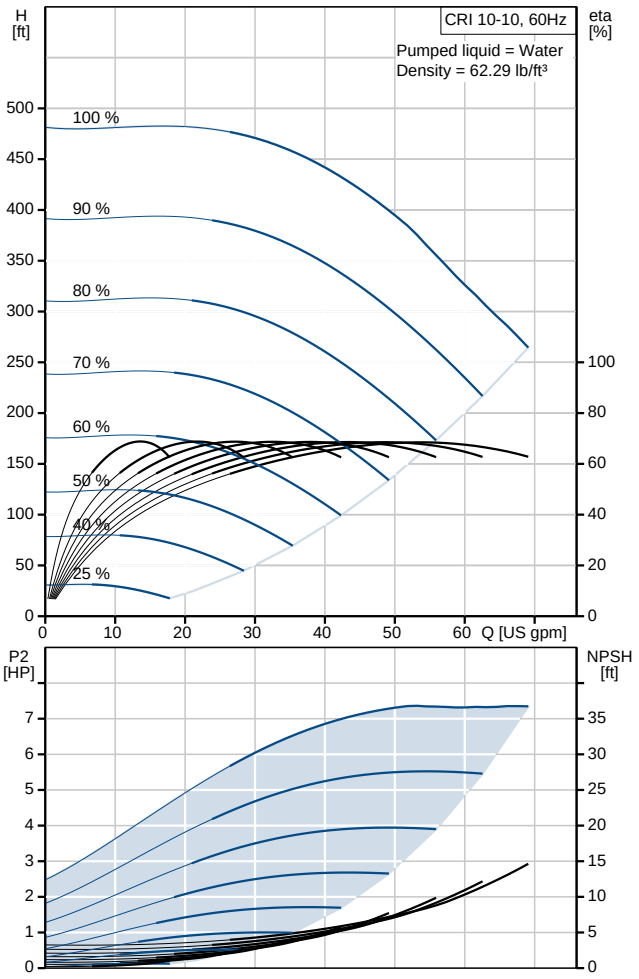

Description	Value
Others:	
Net weight:	192 lb
Gross weight:	212 lb
Shipping volume:	6 ft³

Company name:	-
Created by:	-
Phone:	-
Fax:	-
Date:	-

96523210 CRI 10-10 60 Hz

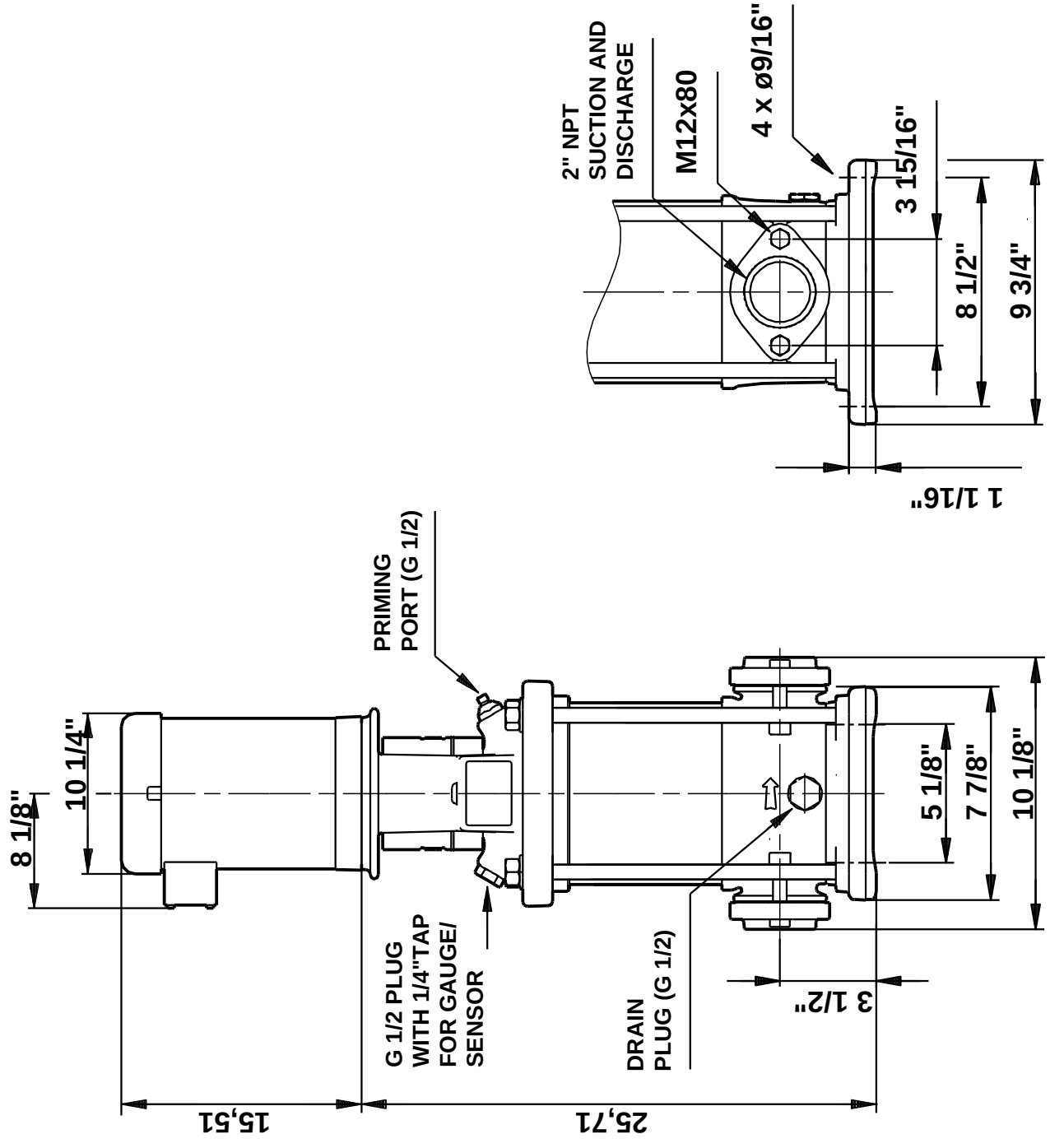

Note! All units are in [mm] unless others are stated.
Disclaimer: This simplified dimensional drawing does not show all details.